Ecodora Srl
Via Marangoni 33, 36022
S. Zeno di Cassola (VI) Italy
Tel. +39 0424 570891
info@ecodora.com

P/N 0E77/45612

Automatic hose guide in painted steel s. 560 for hose up to 1/2"

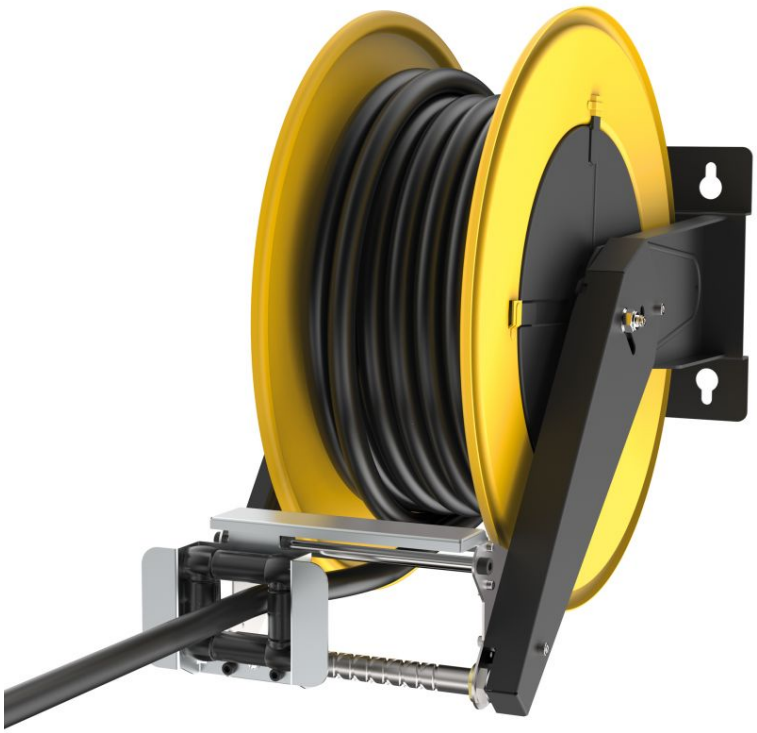

SECTORS OF USE

FEATURES
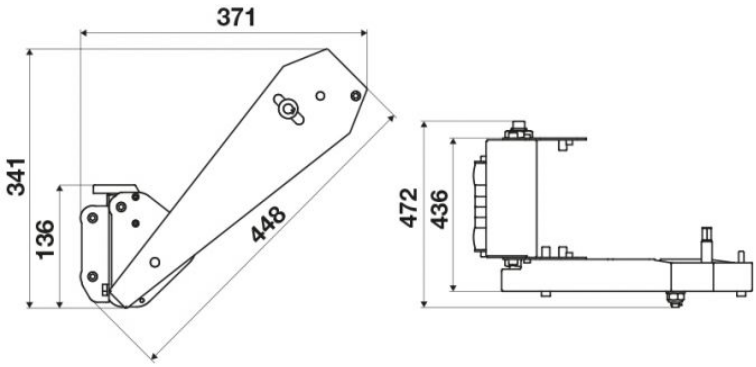
OVERALL DIMENSIONS (mm)